exactly yours

LMT TOOLS MAGAZINE 2018/2019

Evolution Advances
EVOline tangential rolling heads

Intelligent Tool Systems
Self-adjusting fine boring tools

5-Axis Success Story
Radial Milling Cutters

LMT • TOOLS
BELIN
FETTE
KIENINGER
ONSRUD

TOOL INNOVATIONS

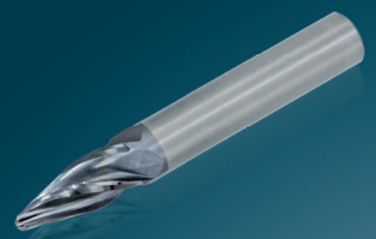

Radial Milling Cutters

The new LMT Onsrud Radial Milling Cutters offer a highly effective alternative for the machining of flat surfaces or the sides of gears in prototypes.
Page 06

EVOline Tangential Rolling Heads

The advantages of the LMT Fette EVOline rolling head generation are now available for tangential rolling. The new EVOline tangential rolling head contains parts made of 3D-printed tool steel and sensor technology that make it ready for the smart factory of the future.
Page 12

Tools with Wear Compensation and Position Sensors

Intelligent tools from LMT Kieninger include a line boring bar with electronic wear compensation and a coolant controlled back countersink with automatic position monitoring.
Page 14

Solid Carbide Mill with Optimized Cutting Face

When it comes to the machining of aluminum, this LMT Onsrud solid carbide mill guarantees short machining times and high cutting depths. The cutting face was optimized with a new geometry for improved chip evacuation.
Page 16

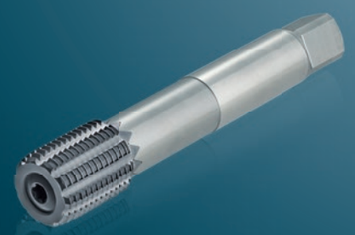

HPF Max Thread Former ≥ M22

Modular LMT Fette HPF thread formers enable high cutting speeds and maximum tool life in mass production. HPF Max is also available as a standard tool in sizes up to M33.
Page 16

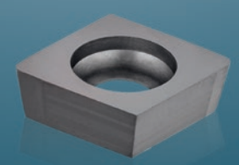

FinishLine Wiper Indexable Inserts

When you need to achieve the highest speed for the finishing of flat surfaces, the new wiper indexable inserts for the FinishLine milling system provides a significantly more cost-effective solution.
Page 23

PUBLISHING INFO
Published by: LMT Tool Systems GmbH & Co. KG, Heidenheimer Straße 84, 73447 Oberkochen, Germany, Phone: +49 7364 9579-0
Responsible according to the press law: Norman Winter, LMT Tools GmbH & Co. KG
Editor-in-chief: LMT Tool Systems GmbH & Co. KG
Concept and editing: LMT Tool Systems GmbH & Co. KG, Script Corporate + Public Communication GmbH, Frankfurt am Main
Design: Braun Engels Gestaltung, Ulm
Printed by: Weidner GmbH, Rostock

Picture credits:
Fotolia: P. 8 (Marion Bönisch), P. 10 (pixelABC),
istockphotos: P. 11 (MartinFredy), P. 19 (rommma), P. 24 (MJ_Prototype)
Karsten Socher Fotografenmeister/Bildjournalist, Kassel-Nordshausen: S. 5, 7, 11, 15, 19, 21, 23
Liebherr Verzahntechnik GmbH: P. 26
LMT Belin France S.A.S, Lavancia: P. 18,
LMT China Co. Ltd.: S.27
LMT Fette Werkzeugtechnik GmbH & Co. KG, Schwarzenbek: Title, P. 2, 22, 27
LMT Group GmbH & Co. KG: P. 3
LMT Kieninger GmbH & Co. KG, Lahr: P. 2, 9, 14, 15
LMT Onsrud LP, USA: P. 2, 6, 7
Studio Thomas Schmitz GmbH, Hamburg: P. 2, 5, 11–3, 16–18, 20–21, 23–26
ZWP Zahnradwerk Pritzwalk GmbH: S. 17

Dear Readers,

Technological developments such as digitalization or the increasing integration of additional processes pose a more complex growing challenge for companies within nearly all areas of the production process.

Digitalization and ongoing technological changes have turned into a strategically competitive factor with our customers. Featured in this magazine are our newest tools and selected practical examples of how we, together with our customers face such challenges.

Focusing on the specific needs of our customers with our product innovation, we are able to provide individual benefits to increase efficiency, tool handling and performance. One example of such benefit is the EVOline tangential thread rolling head which was developed by our engineers in close cooperation with our customers. To learn more on the details of this innovation, please refer to page 12 in the magazine.

Future oriented tool systems which are linked with machines and the exchange of processing information start to play an increasingly more important role. Tools with integrated sensors and intelligent monitoring create new opportunities to optimize the production process. With our LMT Kieninger precision boring tool we have integrated for the first time, electronic components which allow for an electrical or fully automated control system and calibration of tools. Reports on this subject can be found on page 14 and 15 in the magazine.

Exactly yours is our guiding principle; it stands for developing solutions of customer specific requirements. Extensive experience and know-how of our employees is a particular strength we claim with our customers in confidence. Therefore, I am pleased to offer you our professional competencies at an even greater availability with our new facility in China and our increased presence in Europe and Mexico.

Enjoy reading this magazine.

Yours,
Daniel Ehmans

Executive Board LMT Group,
CEO LMT Tools

Meeting Individual Needs

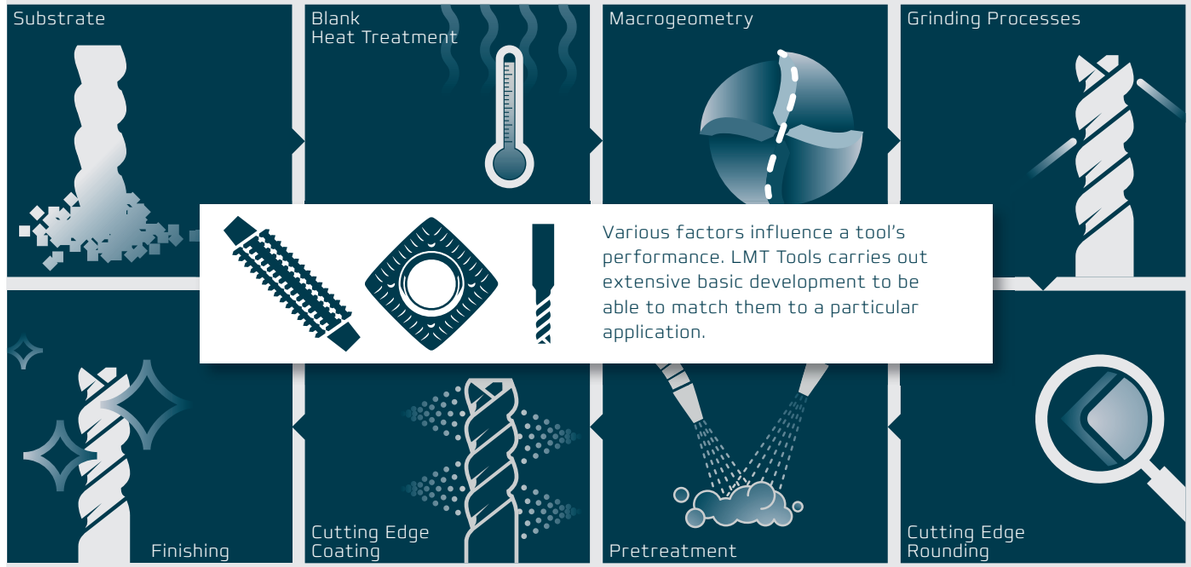

Various factors influence a tool's performance. LMT Tools carries out extensive basic development to be able to match them to a particular application.

In many sectors tools are becoming the key players in high-volume production. They make a major contribution to improving productivity and meeting increasing quality requirements. Addressing quality objectives of this kind is practically impossible with standard solutions alone – the individual application is becoming the focus of tool development. We interviewed Uwe Kretzschmann, Head of R&D at LMT Tools, about the right "control levers", extensive basic research, and the challenges of finishing 3D-printed components.

Mr. Kretzschmann, what exactly do you mean by "application-oriented" development?
A transformation is currently taking place in the industries of our customers. Take a look at the automotive sector, for example: developments like lightweight design and electromobility involve enormous challenges for production. This is because more and more components are being made out of high-strength materials, for example, or material parts that require reduced wall thickness. We see ourselves assisting in this transformation towards application specific tooling, however, we can only achieve this if we know everything about the new challenges associated with an application and can base our tool development on that.

What does that depend on?
First of all we speak with our customers to fully understand and recognize their processes and component requirements. Ideally, the whole development process then takes place in close coordination with users.

What kind of know-how do you contribute as tool specialists?
We have a wide range of experience with different components, materials, and their respective processes. On the other hand, we carry out basic development on all aspects relating to tools.

In the process, we conduct exhaustive analyses of how central tool parameters affect tool performance to determine the "control levers" for application-oriented development.

Uwe Kretzschmann
Head of Division, R&D and Design
ukretzschmann@lmt-fette.com

What kind of performance hikes can you achieve that way?
Let's take an example from automobile manufacturing. We've just developed a new thread-forming tool for the production of so-called fracture-split connecting rods – an automotive mass component with high quality requirements. Our main goal was to give users a thread former offering long tool life. This application entailed significantly reducing friction during the forming process. To accomplish this task we defined a special tool geometry for processing the fracture-split conrods. The surface quality of the tooth flanks, the radii of the forming edges, and the coating itself contributed to further reductions in friction.

But aren't factors like tool geometry or coating relevant to all applications?
Of course, but always to a different extent. Here we need to know from the very start which parameters are really important and what effect they have. For example, one of our customers wanted to optimize the roughing of a component made of hardened steel. The crucial criteria for success here were the choice of substrate and the geometry of the DHC Hardline tool used.

Are some areas of application especially challenging?
The machining of titanium alloys is worth mentioning here. Its high durability and good corrosion resistance means this material is coming to the forefront in medical technology – for example, in the manufacturing of artificial knee joints. The machining of titanium alloys is challenging, because the material has poor heat conductivity. Here LMT Tools has developed solid carbide end mills that deliver long tool life with increased production cutting rates. In trials, this value was up to 500% higher than when using competitors' tools.

Where else are difficult materials used?
Mold and die making is a field in which we have to deal with extremely hard materials, sometimes up to 65 HRC. They can also have extremely high carbide content, as well as overlay or repair welded areas. The challenge of producing tailormade tools for these applications lies in finding the right combination of macrogeometry, microgeometry (cutting edge rounding), surface topography, substrate and coating.

How are the technologies of the future, such as 3D printing, influencing your work?
Here, too, we are identifying major parameters for tool development. The manufacturing process plays a central role when it comes to the finishing of 3D-printed components. This affects the structural arrangement of the component in the printing chamber, the arrangement of support structures, any distortion compensation and the clamping concept. We design all our tools and their milling strategies on the basis of these factors – in other words, in keeping with the maxim "exactly yours".

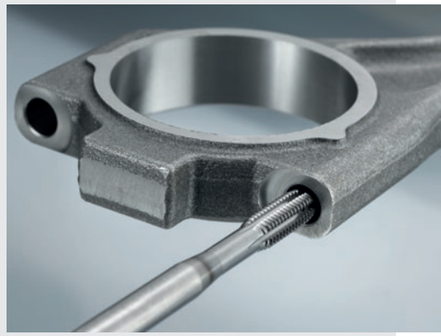

Our specialists developed a new thread forming tool specifically designed for the for the production of fracture-split connecting rods that delivers increased tool life.

5-Axis Success Story

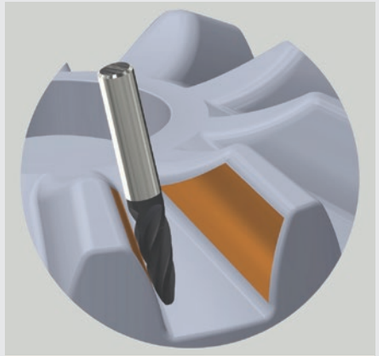

Oval Profile
e.g. for gear finishing

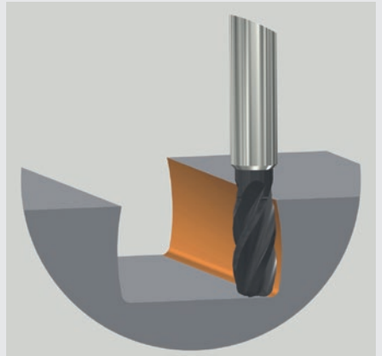

Barrel Profile
e.g. for lateral contours and undercuts

Radial milling cutters are used in the aerospace, energy technology and die and mold sectors as well as general engineering. What they all have in common is the change to radial milling cutter movement of the cutting edge. The different cutting edge profiles are precisely adapted to the component (see left).

Tapered Profile
e.g. for tangential milling of planes and shoulders

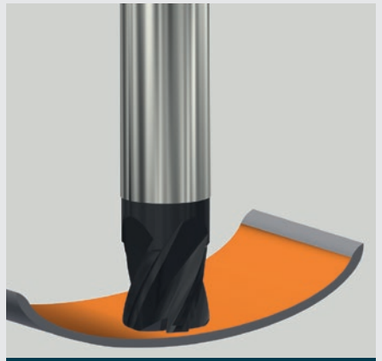

Lens Profile
e.g. for freeform surfaces

Mark Flommer
Product Manager
Milling Roundtools
mflommer@lmt-tools.com

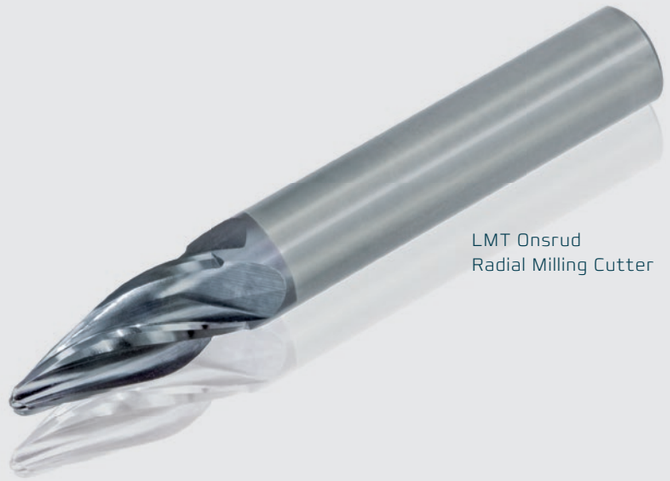

LMT Onsrud
Radial Milling Cutter

The speed and accuracy of a milling process is largely determined by the interplay of three elements: machine, tool and CNC program. New highly productive machining options are now also opening up – thanks to radial milling cutters. How can they reduce machining times and tool wear? In answer to this question, LMT Onsrud experts have developed the appropriate tool and relevant milling strategy.

A quick glance at an engine blade makes the challenge very clear: this component is 1.5 millimeters thin and, therefore, very fragile. Nevertheless, it has to withstand a total of three milling processes with maximum process reliability: roughing, pre-finishing and finishing. “In this case, a conventional ball nose end mill would generate higher vibration,” explains Mark Flommer, Product Manager Milling Roundtools. “That has a negative effect on surface quality, cycle time, and tool life. That’s why we developed the new radial milling cutter for this and similar applications. It represents a highly effective alternative for the machining of many kinds of flat surfaces or the sides of gears in prototypes. The whole process becomes faster, more accurate and more stable.”

Utilizing the full length of the cutting edge
It all depends on the interplay between tool, machine, and programming: the tool has a special cutting profile (see diagrams opposite) and cuts the component outline with targeted movements precisely programmed for the appropriate freeform surface – a 5-axis machine is the basic prerequisite for this. The key innovation here is the increased usable length of the tool’s circumferential cutting edge. This makes for more balanced cutting wear, higher radial engagement, and increased dynamic stability with low vibration. As a result, surface quality and tool life are increased and machining time is significantly reduced. This means it is also possible to manufacture components with thin wall’s with high precision and considerably reduced vibration.

Focus on strategy
The design of the complete process is carried out on an individual basis: LMT Onsrud experts adapt each tool including its radii, angles, and diameters as well as the length of its cutting edge to the specific machining task. The same applies to the development of a machining strategy for the CAM system. Ultimately, these “exactly yours” tools enable customers to benefit from an totally stable and efficient process completely tailored to their needs. In addition to this, LMT Onsrud also has a range of standard high-performance radial milling cutters available from the warehouse.

Under Pressure

Large numbers of pneumatic cylinders are used in modern production systems. Their machining demands the highest possible precision.

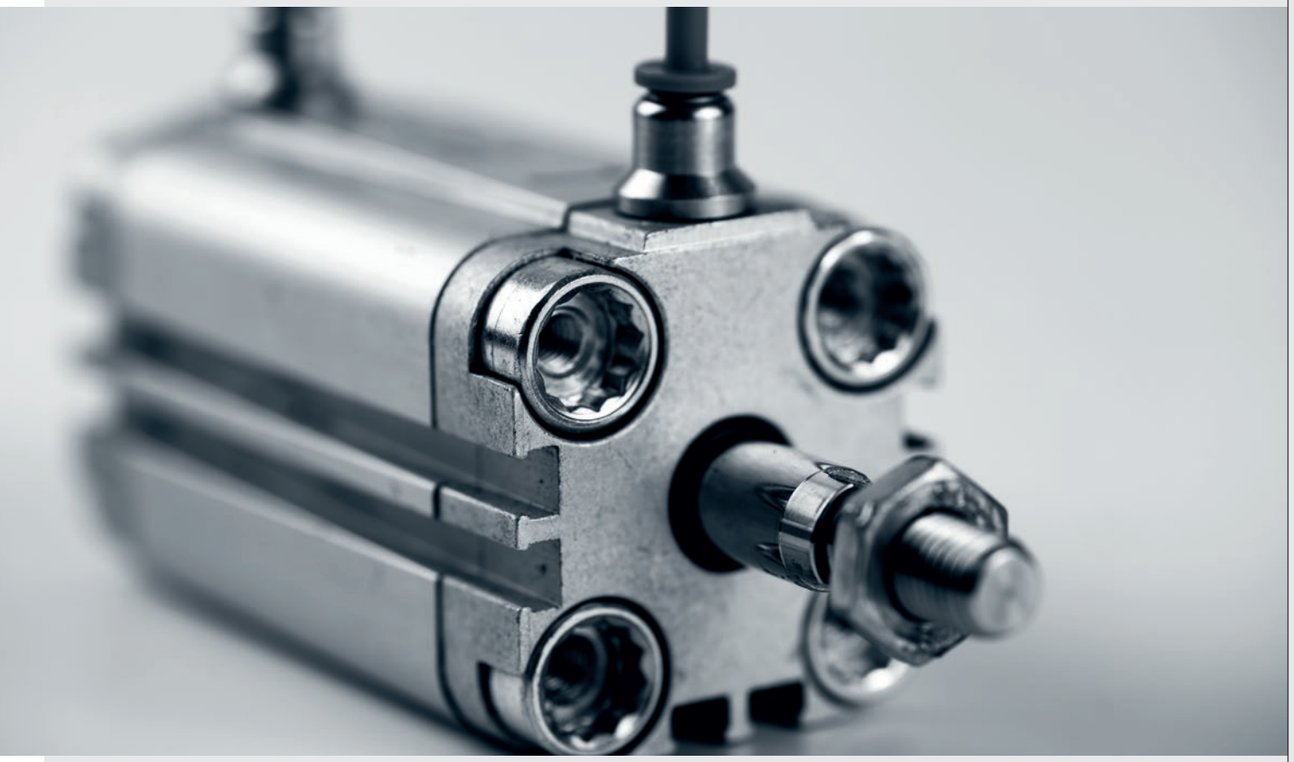

Industrial production processes would be almost unthinkable without pneumatic drive systems. Particularly, when it comes to drive and handling technology, compressed air keeps things moving. Pneumatic cylinders are the key components components here and the entire production systems depend on their trouble-free operation. That's why their production requirements are very stringent. A new LMT Tools application example shows why tools play a key role in this sector.

Durability is one of the decisive properties of pneumatic cylinders. These cylinders have to remain in service for years, while constantly being subjected to high pressures. The material and the surface quality of the cylinder bore are critical. A major manufacturer of industrial automation technology decided to use very durable wrought aluminum alloys to meet these tough requirements and to make the production process as efficient as possible. This presented a real acid test for the tools involved. The specialists contacted LMT Tools to develop specialized tools and an appropriate tool strategy for their application.

Wrought aluminum alloys present a tough challenge

"We had to take into account a whole list of basic conditions and goals," explains Lukas Gerhart, Engineering PCD and CBN Tools. "On one hand, it was important to accurately realize the designers' specifications in the process while also bearing in mind the entire periphery of the process. Here the customer is mainly looking for simple handling and very high efficiency. On the other hand, the robust wrought aluminum alloys presented special challenges, for example, long chips forming on the tool without special cutting edge preparation. These can damage the surface of the workpiece or accumulate inside the machine and then interrupt the process."

Lukas Gerhart
Engineering PCD and CBN Tools
lgerhart@lmt-kieninger.com

Finishing solutions

Precision and process reliability were the two main requirements on which LMT Tools focused in developing its tool solutions for the multistage cylinder bore machining process.

- A double-edged tool is used for semifinishing. Its special cutting edge arrangement delivers good control characteristics, high cutting performance and ample feed rates. Its large flutes enable the tool to smoothly evacuate the resulting chips. Expensive guide rails are not required.
- Finishing is performed using a tool that has permanently soldered-on, rounded PCD cutting edges as well as a groove cutter with micrometer-precise structure. This arrangement is able to produce very good rotary and cylinder form values and the surface structure required for rolling.

Customers gain a competitive edge

Both tools are high-tech solutions for a high-volume process with minimal form and diameter tolerances. That is why chip breakers are used whose specific structure is applied to the PCD cutting edge by a laser ablation process. "This is a perfect example of what we mean by 'exactly yours'," sums up Gerhart. "We apply our expert knowledge in a targeted way to give our customers a competitive advantage in selected technological sectors. The manufacturers benefit from precise, safe, and cost-effective processes for the overall machining process."

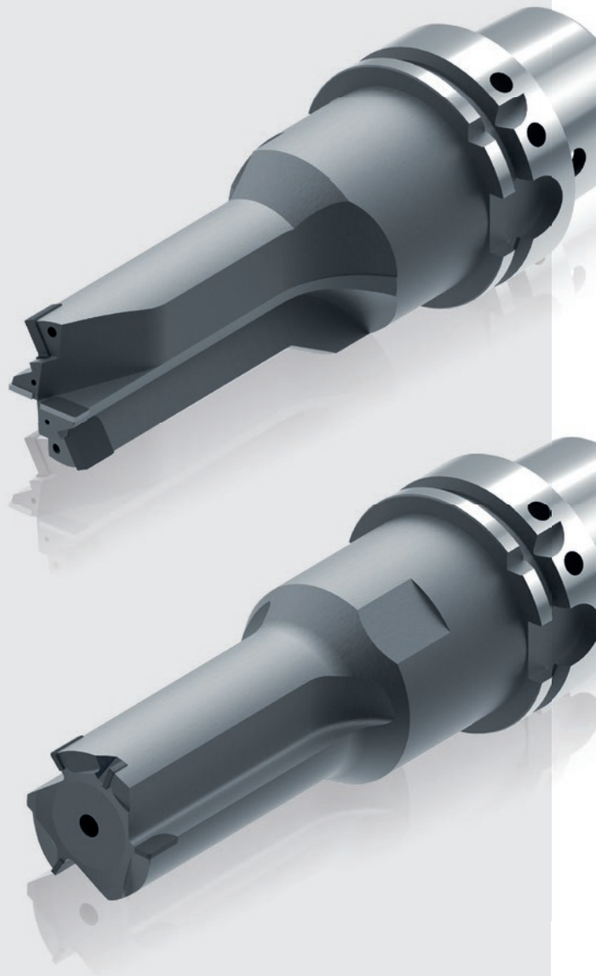

Specialized PCD tools by LMT Tools for the semifinishing and finishing of pneumatic cylinders.

Taking Stability to New Heights

View from on high: Rügen's treetop tower spirals around a 30-meter-tall copper beech for 600 meters.

Tie rods provide a secure means of support in civil engineering. Among other places, they are deployed in wooden structures, such as towers, bridges or halls. Tie rods are used to firmly brace together different construction elements. Considerable force is exerted on the thread, which accordingly has to be especially strong. LMT Fette offers the appropriate solution for this application with its axial rolling heads. Stefan Möller, Product Manager Rolling Systems, explains why.

Stefan Möller
Product Manager Rolling Systems
smoeller@lmt-tools.com

Mr. Möller, how important are tie rods in your segment?
Tie rods are a key component for us. In the construction industry, they are a major area of application for our axial rolling systems, alongside the machining of threaded bolts, which are found in wind turbines, for example. The applications for tie rods in the construction sector are incredibly varied. An interesting example here is treetop walkways, for which our customers use tie rods to provide the necessary stability. Because these structures are anchored by the threads, the highest quality standards apply, especially with regard to thread strength and profile accuracy. There's a growing demand here for rolled threads.

Why are the manufacturers of tie rods moving to thread rolling?
The material fibers are permanently moved under pressure during the rolling process. This leads to the compaction of the material, especially in the thread base, and, therefore, to a considerable increase in thread strength, which is ideal for the enormous forces acting on tie rods. In addition, our rolling systems deliver high levels of profile accuracy and the shortest processing times. They can also be used on machine tools, which increases production flexibility. Customers no longer have to depend on external suppliers and can make tie rods on their own premises in the required design and number and, above all, within the necessary time.

How are you supporting this change in technology?
First of all, customers who previously produced tie rod threads using cutting methods will benefit from the fastest manufacturing technique when they introduce thread rolling. LMT Fette offers the largest product portfolio in this field, covering all requirements. This includes an external diameter range up to 230 millimeters. In addition to the appropriate rolling heads, however, it is also possible to prepare workpieces for rolling with peeling heads and chamfering tools. Manufacturers can realize the most complex projects by taking advantage of our application engineers' advice and our extensive engineering expertise. This is precisely what we mean by our maxim "exactly yours".

Example Thread Types and Rolling Times

Thread Size	Thread Length	Pure Rolling Time
M20 x 2.5	80 millimeters	4 seconds
M64 x 4	120 millimeters	12 seconds
M90 x 4	150 millimeters	22 seconds

The tie rods are securely and accurately fastened thanks to the axially rolled thread.

The EVOline tangential rolling head enables fast, highly accurate and process-reliable production – even of the most demanding threads.

Rolling Head Evolution Advances

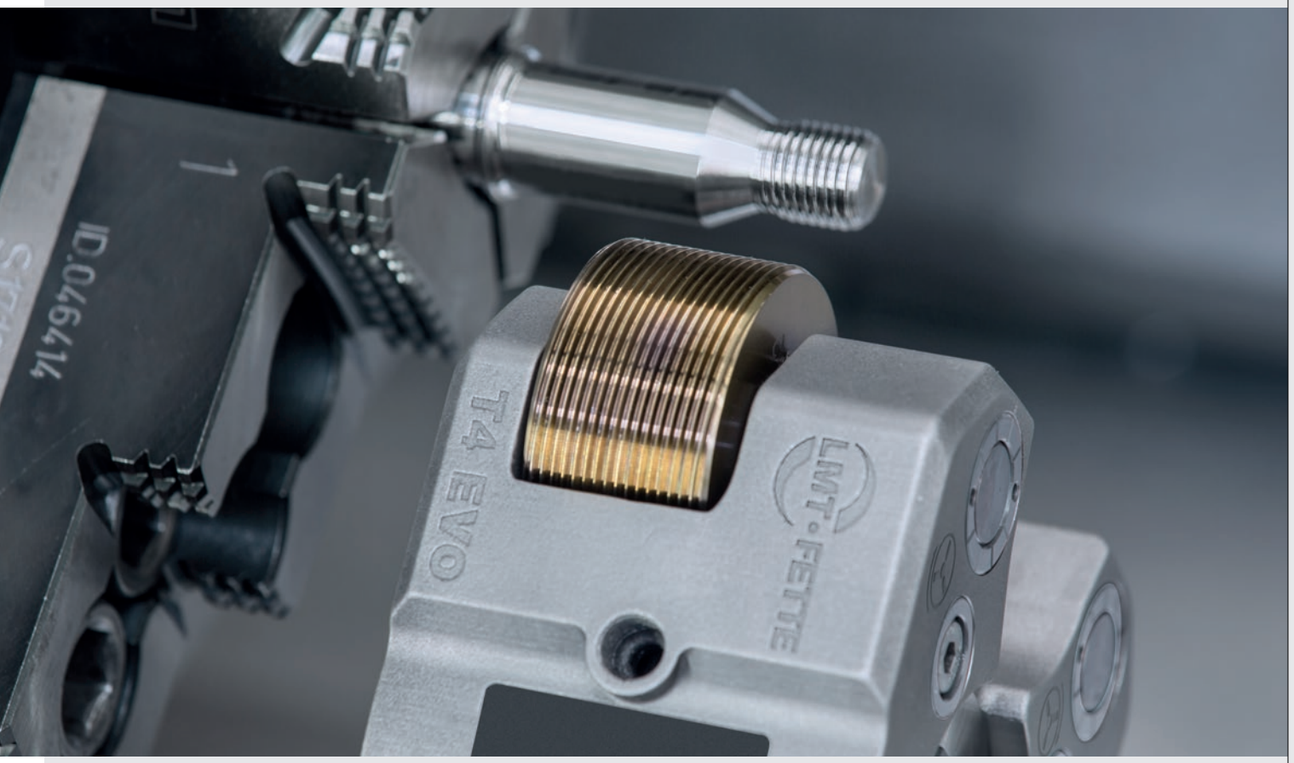

A few years ago, LMT Fette opened a new chapter in chipless threading with the EVOline rolling head generation. It began with an axial rolling system. This has now been followed by the EVOline tangential rolling head, which is an "evolutionary advance" in two respects. First, it offers an increase in process reliability combined with a major simplification of tool handling. And second, with 3D printing and intelligent sensor technology, the rolling head is now ready for connection to the smart factory.

Although usually invisible, they are the crucial connectors in countless applications: threads deliver a stable bond between individual parts – in sectors ranging from automotive engineering to bridge building. The main factors in their production are not only short machining times, but also high fatigue strength and surface quality.

Thread rolling clearly beats thread cutting in these disciplines: process times for rolling are 5 to 20 times lower and fatigue strength undergoes a threefold increase as a result of the cold forming process. What is more, surface roughness R_t at 1 to 4 µm is lower than for many cut threads, which represents an increase in surface quality.

EVOline – the evolution of rolling

For several years now, LMT Fette EVOline rolling heads have combined the advantages of thread rolling with especially high process reliability and optimized handling. Reliable processes are guaranteed by fast, simple and error-free roller changeovers, the easy and precise adjustment of the rolling diameter and a simplified setup. The convenience of handling is increasing because the rolling head can be installed and removed toollessly while the diameter is precisely adjusted using a central adjusting spindle.

Stefan Möller
Product Manager Rolling Systems
smoeller@lmt-tools.com

Outstanding precision from the side

The new rolling head applies these advantages to tangential rolling for the first time. Equipped with two rollers, the tangential rolling head is moved against the workpiece from the side. This enables high-precision results even in the case of short thread run-outs, extremely short threads and locations behind a collar or between projections. Symbols on the rolling head components facilitate correct assembly as well as the identification of spare parts during dismantling. Five rolling head sizes are available, covering a thread diameter of 1.6 to 34 millimeters. Roughly two million threads have been successfully and reliably produced in field trials with the new EVOline rolling head.

Hinges from the 3D printer

A special feature of the EVOline tangential rolling head is its use of 3D-printed tool steel. For the first time, the rolling head hinges are produced using an additive manufacturing process. This makes it possible to integrate adjustable cooling and cleaning jets that support the rolling process with optimized volume flow directly in the work zone. Energy flow-oriented component structures and an improved topology lead to an increase in breaking strength – while also enabling compact design and weight savings. The chip protection cover also stems from a 3D printer.

Electronics for the smart factory

The new tangential rolling head contains intelligent electronics as a key prerequisite for connectivity with the smart factory of the future. A sensor has been fitted and sealed in the rolling head hinge for this purpose. This makes it possible to carry out force measurements with a strain gauge and store force data over time. Furthermore, a counter can also document the rotation of gear wheels in the transmission. The sensor also gives each rolling head its specific "DNA" – for example, date of manufacture, serial number, type, model and possible maintenance intervals.

A new app enables LMT Tools service employees to read out the rolling head data ad hoc over Bluetooth to discuss potential process optimizations with the customer. As a result, the EVOline tangential rolling head also guarantees smart service fully in accordance with the customer's wishes.

EVOLINE
The evolution of rolling heads

Measurement of the force curve by means of integrated sensors

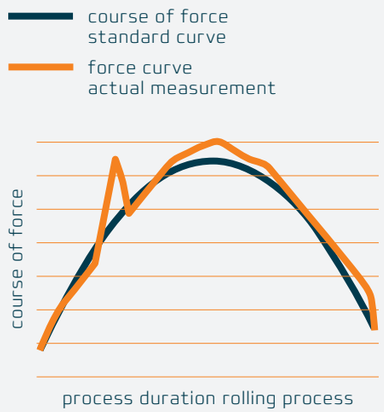

Intelligent Tool Systems

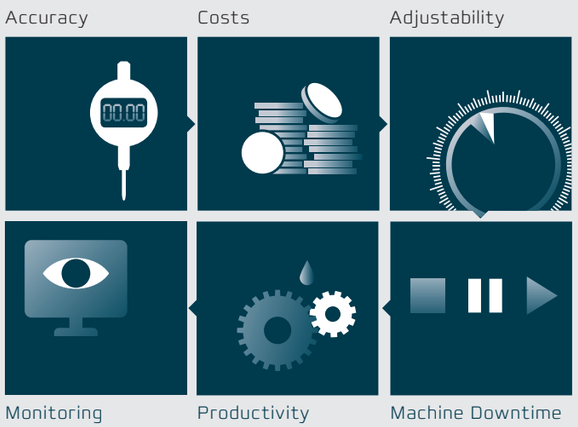

Digitalization is becoming increasingly important in industrial production. Forward-looking tool systems are being integrated into sensor-based and networked production systems. Machines, tools, measuring devices, and plant control systems need to be able to communicate with one another. Intelligent monitoring of machining data will enable tools to respond to changed processes almost in real time. Tool setup will be controlled differently as a result and optimized in a targeted way. The tool industry has begun adapting to this trend. LMT Kieninger offers precision machining tools with various electronic features to meet its customers' needs.

One such feature is process monitoring. Here, complex motion tools are equipped with so-called signal units that determine the positions of cutting edges. A classic example of such a tool is the back countersink. The signal unit, which is visible during the cutting process, indicates whether the adjustable cutting edges are retracted or extended. This overcomes uncertainty about incorrectly folded cutting edges during the backward cutting of holes. This system can be used with the most varied types of motion tools.

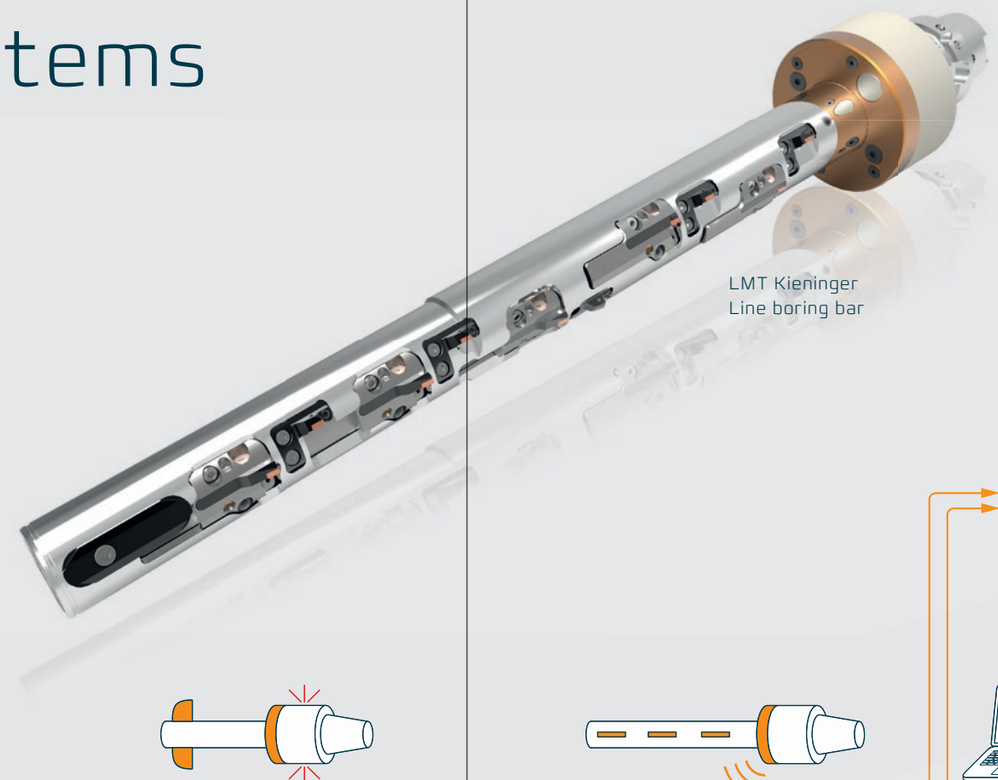

LMT Kieninger
Line boring bar

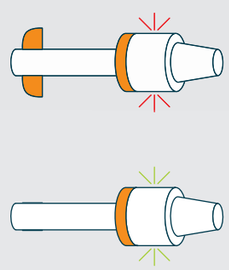

Adjustable to the micrometer
Another feature for the fourth industrial revolution is cutting edge elements that can be moved by electronic or mechanical components. As a result, cutting edges can be adjusted with micrometer accuracy and, if desired, made to automatically compensate for wear as it occurs. This cutting edge adjustment can be carried out using different systems. Depending on the customer's needs, compensation can be performed using a remote control unit, laptop or software and is even possible fully automatically.

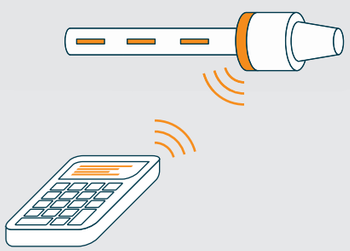

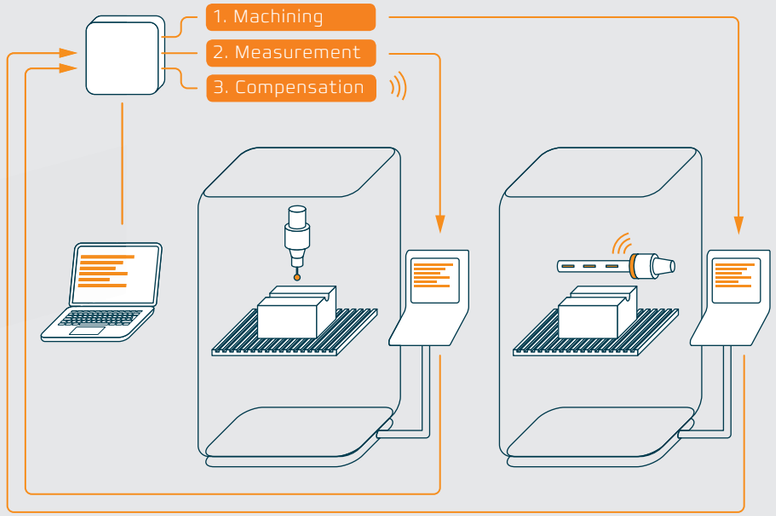

The number of micrometers each cutting edge needs to be adjusted has to be entered via the remote control. At the press of a button, the cutting edges' actuators start up and perform the necessary compensatory movements. Actuators are located under every blade. This makes it possible to adjust each cutting edge independently of its neighbor with micrometer precision.

The software solution offers the same options. In this case, the necessary adjustment value has to be entered into the laptop instead of the remote control. The laptop transmits the values to the tool system and starts the actuators.

Smart cutting edge compensation
Fully automatic compensation makes production lines fit for the fourth industrial revolution. It is a precondition for this kind of fully automatic adjustment that measurements can be carried out after the machining process.
The control unit of the measuring system passes measurement data on to the intelligent tool system. From there, compensation values are passed on wirelessly and fully automatically to the cutting edge actuators. The actuators enable a diameter adjustment range of 0.6 millimeters – with one micrometer accuracy.

The electronic tool system has already successfully passed the machine capability examination (MFU) in a fine boring application at a renowned German automaker. The system also delivered a convincing performance in series testing.

Jürgen Richter
Head of Segment Advanced Tooling
jrichter@lmt-tools.com

Strong Performance

LMT Fette is opening up new possibilities for threading in steel: the Markant® Carbide solid carbide tap delivers high cutting speeds and enables longer tool life. Furthermore, the threading specialists are also expanding their range of innovative HPF Max forming taps. They are now available in sizes up to M33. What makes these tools different?

“We are opening up new opportunities in steel machining with Markant® Carbide. Users benefit from a faster and a more stable process.”

Markant® Carbide offers very high cutting speeds
The Markant® Carbide tool delivers a significant performance boost in steel machining. At the same time, it offers far higher efficiency than HSS-E taps. This is achieved by a durable micrograin carbide substrate. The tap also boasts a wear-resistant TiCN coating whose multilayer structure is ideally suited for machining steel. And last but not least, the threading specialists at LMT Fette tailored the cutting edge precisely to this process. “These three factors make it possible to achieve very high cutting speeds of 50 to 60 meters per minute with Markant® Carbide. Nevertheless, tool life remains high,” emphasizes Andreas Möller, Product Manager at LMT Tools. “That’s why the cycle times for a component are reduced and unit costs fall. We are convinced that carbide taps will conquer the market in several applications and take the place of HSS-E taps.”

At a glance:
- for machining steel (P1 to P3)
- high cutting speed (50 to 60 m/min)
- micrograin carbide and TiCN coating for maximum tool life
- standard tools from M4 to M12 available from stock

HPF Max forming tap now available in new sizes
The LMT Fette modular HPF forming tap has a unique selling point: this tool combines all the advantages of a wear-resistant carbide head and a durable steel shaft – thanks to a patented coupling joint. This enables high cutting speeds and maximum tool life. Furthermore, users no longer have to change the whole tool because of wear, but only the forming head. LMT Fette is expanding its standard range for the HPF Max grade, which is immediately available up to size M33. Features include a micrograin carbide substrate (LCP25G), optimized geometry and an especially wear-resistant TiCN coating. “These factors guarantee improved cost-effectiveness in mass production and in mechanical engineering compared to one-piece HSS forming taps. Furthermore, we are also reducing delivery times with the expansion of the product line.”

At a glance:
- wide range of applications in material groups P, N, M
- M8 to M33 immediately available as standard product
- maximum tool life
- short machining time as a result of high circumferential speeds

Andreas Möller
Product Manager Threading
amoeller@lmt-tools.com

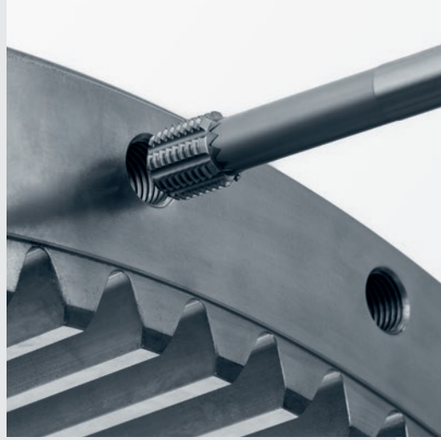

Markant® Carbide M16 (above) and HPFMax M30 (below) in practice.

Lightweight and Stable

The construction of buildings is one of the most extensive applications for composite materials. EU standards set very strict requirements for the sandwich panels used in cladding, especially when it comes to fire safety. That is why one manufacturer of this kind of cladding relies on high-quality aluminum sandwich panels with a non-combustible and flexible mineral core. However, machining this material is a real challenge. A special solution developed by LMT Belin shows how to overcome it.

“Because the core of the new product is made of mineral material it has a very abrasive effect and soon takes solid carbide tools to their limits,” explains Luis Garcia, application engineer at LMT Belin. “Initially, the customer used standard tools with greatly reduced tool life. Our challenge involved developing a milling tool that offered a significantly longer tool life and was economically viable.”

From standard product to ‘exactly yours’ solution

On its way toward a tailormade solution, LMT Belin carried out cutting tests with different tools, coatings and geometries. The favorite turned out to be a polycrystalline diamond (PCD) mill. “PCD proved to be the best solution,” reports Garcia. “The first tests were successful; the only thing that needed to be optimized was chip removal. For that purpose, we changed the geometry again by reducing the angle on the cutting edge for optimum chip evacuation. Eventually we found the appropriate specialized solution that did full justice to our ambition ‘exactly yours’.”

Using the PCD mill extended tool life from roughly 20 meters to one kilometer per unit – in other words, a fiftyfold increase. “The customer was pleased with this cost-effective outcome and very grateful for the time our engineers had invested in testing and developing solutions to achieve the optimum outcome,” says Garcia.

PCD tools for Fire Classification A2 materials

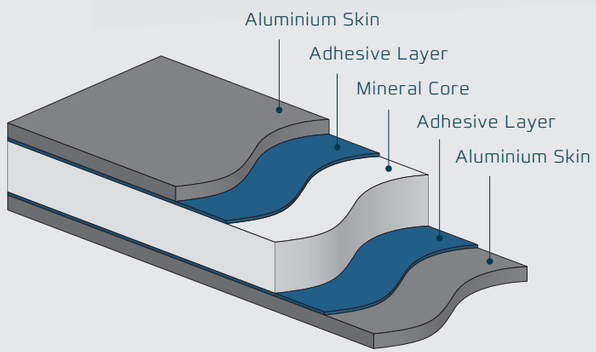

Setting the Pace for Aluminum

Mark Flommer
Product Manager
Milling Roundtools
mflommer@lmt-tools.com

Aluminum doesn’t rust and weighs only a fraction of iron, yet still offers a similarly high tensile strength. It is no wonder then that this metallic jack-of-all-trades plays an important role in many sectors. Nevertheless, there is no “one size fits all” machining approach to aluminum. Especially when it comes to cutting technologies, everything depends on selecting the right tool and machining strategy.

Aluminum alloys form the basis for the stable lightweight designs of products ranging from aircraft components to bicycle frames and machine parts. They have an important influence on achieving the required strength and toughness. Adding manganese, magnesium, copper, zinc or silicon can alter the rigidity or the electrical conductivity of the basic material. Furthermore, aluminum alloys with a higher silicon content can also be made harder using a heat process. Subsequently, the material will permanently withstand the high pressure loads in a pump housing or valve insert.

“However, whether the aluminum contains a low or high proportion of silicon makes a great difference to its mechanical processing,” explains Mark Flommer, Product Manager Milling Roundtools. “In the latter case, the material tends to be more abrasive, leading to higher tool wear.”

Cutting machining time by more than half

The example of a high-volume structural engine component made of the aluminum alloy AlZnMgCr1.5. illustrates the economic potential that the right choice of tool opens up. In the past, the user relied on a indexable insert cutter with a cutting speed of v_c = 750 m/min^{-1} and a cutting depth of 3.8 mm. The tool life of each insert was 6 components and the machining time of three hours generated high unit costs.

“It was against this background that the customer approached us with the task of developing an alternative tool,” explains Flommer. “We identified the low cutting volume of the indexable insert cutter as the main weakness.” AMC704164, an LMT Onsrud solid carbide cutter, offered a solution. Although this standard tool operates at a significantly lower cutting speed, the cutting depth is roughly 8.5 times as high at 32 millimeters. This substantially increases the material removal rate. As a result, the machining time fell to just 1.25 hours, while the tool life per cutter increased fourfold to 24 pieces. Accordingly, the customer can produce far more components in the same period with lower unit costs.

The large aluminum alloy engine component can be manufactured over twice as fast using the LMT Onsrud tool.

The Perfect Angle

The efficient machining of 90-degree angles is indispensable for many components used in the general engineering, automotive, and aerospace sectors. However, new applications require even faster and more accurate milling processes – a trend to which LMT Fette has responded with its new Univex Premium face and shoulder milling system. Cycle times are significantly reduced by high material removal rates.

Producing a perfect rectangle is a challenging milling task: two surfaces have to be machined at the same time – and often this has to be done as part of a complex machining strategy involving deep cavities. In the process, high milling temperatures occur that require the use of coolants. Ultimately, this means that precision shoulder milling is almost inconceivable without the use of high-performance tools.

Some years ago, LMT Fette developed Univex Premium, a tool solution for this application with predominantly press-to-size inserts. The highly positive geometry and uneven pitch of this shoulder milling system ensure a soft cut and smooth operation that guarantee high surface quality with low machine power consumption. The tool also offers a long-life body and a large number of cutters.

New Univex Premium options

The focus of current development is on ground cutting inserts, as Korvin Michalak, Product Manager at LMT Fette, explains: “We examined the current market requirements in depth. The cost-effectiveness of work steps remains a key issue. Ground cutting inserts in particular were optimized with new carbide grades and coatings. The new inserts enable users to further improve material removal rates in the machining of cast iron and steel. This reduces cycle times and ultimately also unit costs.” In addition to this, precision sintered indexable inserts with circumferential protective chamfer are also available from LMT Fette. In both cases, users benefit from wear-resistant substrates that produce excellent surface qualities on the component.

New indexable insert also suitable for special tools

In the future, it will be possible to use the new ground inserts with the whole Univex Premium standard program (see box on right). Moreover, the milling specialists have been looking at special tools with their innovation. “We have implemented a blank strategy. In addition to the normal corner radii, we have a ‘semi-standard’ as well. This means we are now in a position to offer swift and economically meaningful solutions for all needs. In combination with special body designs, all customers can benefit from these performance increases, even if they have highly specialized applications,” says Michalak.

Korvin Michalak
Product Manager
Indexable Insert Milling
kmichalak@lmt-tools.com

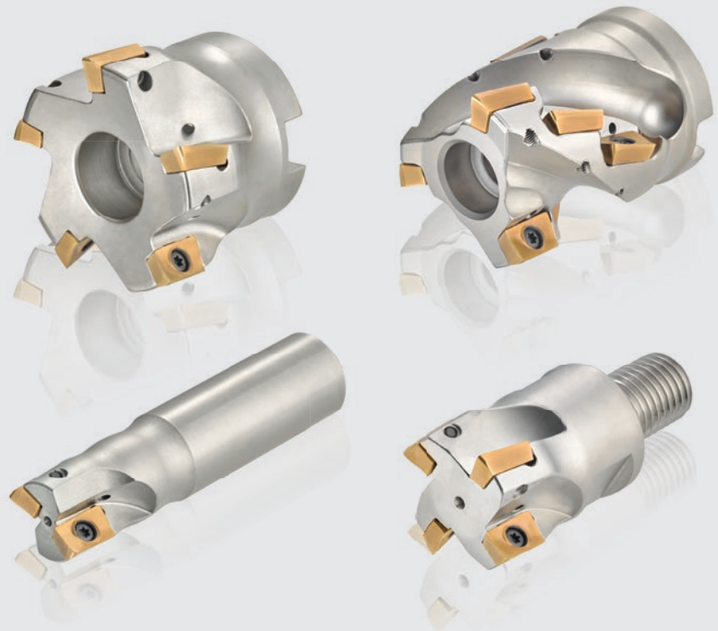

LMT Fette Univex Premium face and shoulder milling system

The World of Face Milling

Overall, the Univex Premium range opens up numerous application opportunities for users beyond shoulder milling. The tool is also suitable for face milling, oblique plunge milling, and circular milling.

1. The basic body is available in a shaft, plug-on and screw-on version. Shell end mills are also available in shaft and plug-on versions for pure roughing applications. All Univex Premium cutters are equipped with an internal coolant supply and protected against wear.

2. The indexable inserts are basically available in two versions: precision-sintered or ground. In addition, there are four different sizes and seven different corner radius.

Powerful side position

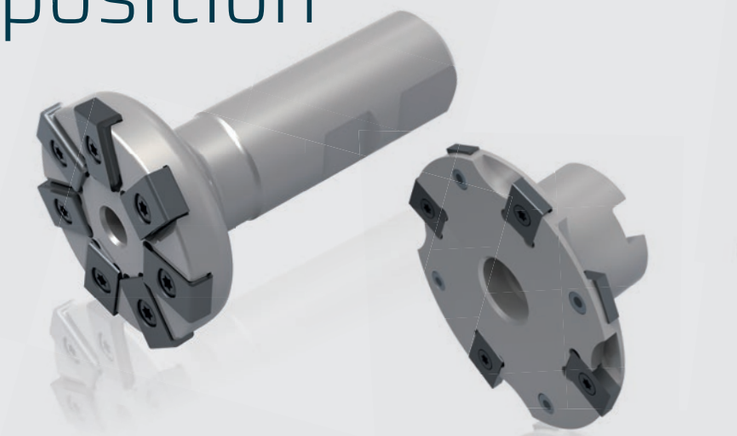

LMT Tools develops modern high-performance products – from plunge mills and side milling cutters to complex face and shoulder mills (from left to right).

Micrometer-scale machining, short cycle times, and complex geometries – today's demanding production tasks can only be mastered with tailor-made tool solutions. Special tools with tangential arrangements of indexable inserts open up new opportunities: large numbers of cutting edges combined with maximum stability.

How can we further reduce the unit costs of mass production? The answer depends decisively on tool use: new efficiency potentials arise when tools and machines are perfectly matched. This is what LMT Tools specialists aim to achieve in close cooperation with users and machine manufacturers. They support processes all the way from the development of a machining strategy to actual production.

Focus on mills with tangential inserts
Special tools with indexable inserts offer developers multifaceted opportunities for optimization. Specific material requirements and the most varied of machining tasks can be addressed by targeted solutions for the basic body and cutting inserts optimized for the application at hand. LMT Tools is continuously and deliberately expanding its indexable insert program. "We are primarily focusing our attention on tools with a tangential arrangement of inserts," explains Korvin Michalak, Product Manager at LMT Fette. "Tangential technology opens up new possibilities for tool concepts and designs, thereby promising maximum performance in the cutting process. Using this technology, cutting forces are absorbed across the entire insert profile, which substantially improves tool life."

This successful approach is now to be realized in smaller dimensions too, which is why the line of tangential inserts is being broadened with various reduced sizes. The smaller inserts also have eight usable cutting edges. "On the basis of this it is possible to guarantee long use of the individual inserts plus falling unit costs," concludes Korvin Michalak.

Performance Plus in Practice
One application at an American company shows what kind of potential special tools with tangential indexable inserts can open up. An LMT Tools special tool with a total of 35 indexable inserts was deployed in engine production. As a result of the optimized tool geometry with a high number of cutters and "tangential stability", it was possible to reduce machining time from 220 to 144 seconds in comparison to the previous tool. This has had a direct and positive impact on the cost of the whole process.

The Wiper Effect

Hanjo Gissler
Product Manager Milling
hgissler@lmt-tools.com

An innovative indexable insert from LMT Kieninger promises even faster processes – thanks to an optimized wiper geometry. Fine finishing with the insert delivers surfaces in grinding quality and reduces production times.

The fine finishing of planes and vertical surfaces presents a challenge in die and mold making. On one hand, the process occurs at high speed, while, on the other, the processed material has to present an especially high surface quality. Indexable inserts with a wiper geometry have certain advantages in this field of application: their finishing edge is elongated beyond the corner radius, which improves surface smoothing on the workpiece and enables the use of even higher feeds.

LMT Kieninger experts have developed this approach further for the FinishLine milling system. Wiper indexable inserts with a larger axial and radial finishing edge are now immediately available. The whole process is faster and more reliable.

Example Time Saving during Field Trial

Previously: Infeed during finishing of a 90° wall 0.75 mm
New: Infeed 1.4 mm

In the case of a wall height of 120 mm, this represents a reduction in the number of sweeps from previously 160 to only 86. This corresponds to a time saving of approx. 45%. And this is achieved while maintaining the same surface quality.

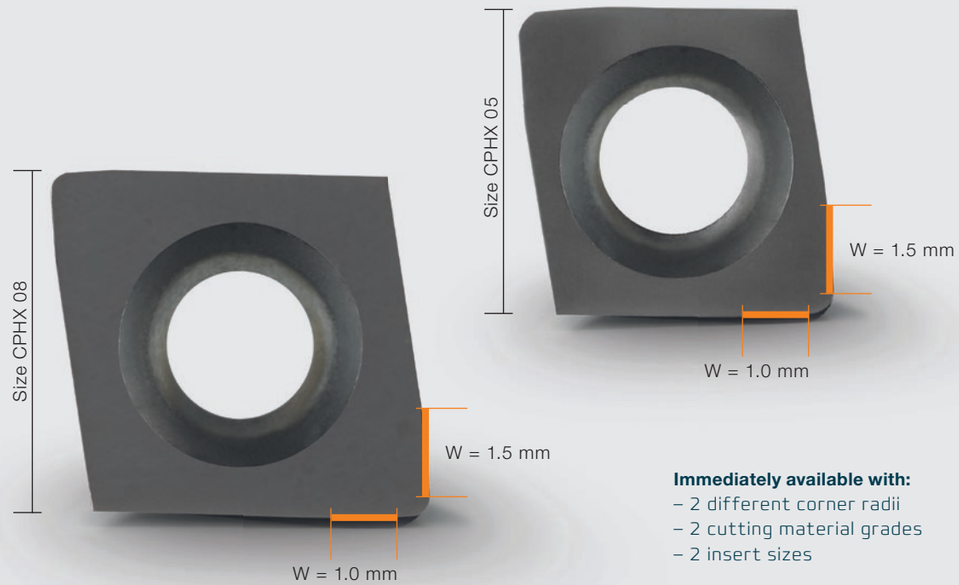

Immediately available with:
– 2 different corner radii
– 2 cutting material grades
– 2 insert sizes

Coordinated Teamwork

Customer Service
Silke Beer brings all the threads together.

"Using different jigsaw pieces, we developed an overall solution within the team that enabled fast production with only a few tools. To achieve that, we all pulled together. You notice that customers feel well looked after and appreciate our efforts."

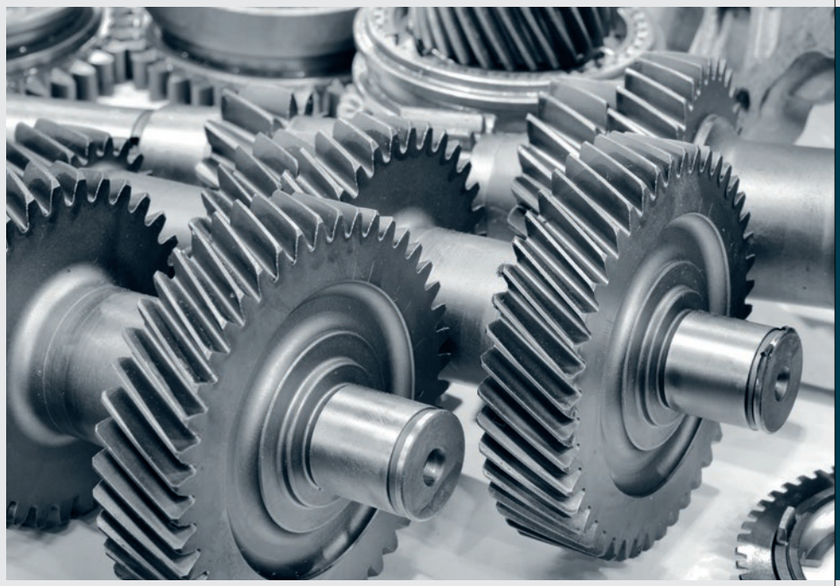

More Gears, Fewer Tools
Stelter Zahnradfabrik, a manufacturer of gears, approached LMT Fette with this interesting assignment. The challenge of the new transmission system was that it had many components with different specifications. At the same time, however, the number of hobs for machining the entire program was to be reduced to a minimum. It was an ambitious task, which ultimately depended on one thing: smooth cooperation between everyone involved.

Technology Center
Wolfgang Krüger lends the tools their design.

"When it came to profile design for the hobs, we coordinated closely with Stelter so that one tool would be able to cover the highest possible variation in the number of teeth with the same module. We fully exploited the constructive opportunities available for this project. The fact that we were able to produce the various components with only a few tools was a real success."

Process Engineering
Torsten Oellers has the whole process totally under control.

"We've worked with Stelter for many years and that has created a high level of trust. We know their requirements and technical equipment, which enables us to find appropriate solutions. The best moment in the project for me was when the first good parts rolled off the machine. That's what's great about my work: I support a tool from the original idea to its successful use."

Service
Sonja Menzel returns tools to their original sharpness.

"We return tools back their original performance after every use. We work closely with new tool manufacturing to optimize processes and technologies – also for reconditioning. In the end the saying always comes true for us: 'No news is good news.' If we hear nothing, the customers are happy and production is running smoothly."

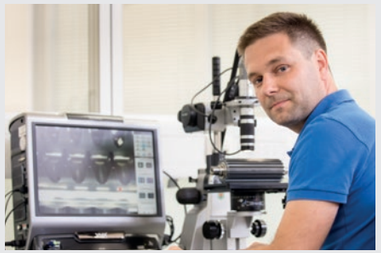

Development
Ronny Fischer finds the best solution – even for wear.

"I was not completely happy with the first analysis of the wear pattern. In discussions with the design and application engineering teams we, therefore, agreed on a slightly modified cutting edge rounding. Generally, we also rely on experiences from other successful tool applications. Eventually, the wear pattern was the way we wanted it for the specific application at Stelter."

André Bollow
Product Manager Gear Cutting
abollow@lmt-tools.com

All-Around Support for the Highest Efficiency
Gear manufacturers face constant competitive pressure to optimize their products and processes. In this situation, targeted advice on everything associated with the gear cutting process is important – a factor that is directly reflected in improved productivity. "Our experts quickly recognize whether changing the cutting material, for example, will lead to a more productive overall process or other adjustments need to be made," explains André Bollow, Product Manager Gear Cutting at LMT Tools. Individual tool design is then carried out precisely in line with the customer's component and machine requirements. "We analyze the process and decide after initial runs whether it would be meaningful, for example, to make further adjustments to the cutting edge rounding. That kind of fine tuning can improve productivity even more," says Bollow. "In any event, the end result is a perfect gear cutting process."

Stelter Zahnradfabrik
Founded in 1950, this owner-managed business has developed into Europe's quality leader for metal gears and sprockets. Today, some 400 employees produce large and small batches of products in a precision and variety that sets new standards. That is why brand name manufacturers in the industrial, automotive, wind, power and rail sectors use high-tech gears made by Stelter. Highly automated production processes ensure absolute precision combined with maximum cost-effectiveness. That is quality "made by magic hands".

The Perfect Chamfer

Perfecting Gear Production
- chamfer correction via machine control
- highest quality and long tool life
- constant depth of the resulting chamfer
- no burrs or material deformation
- very short setup times

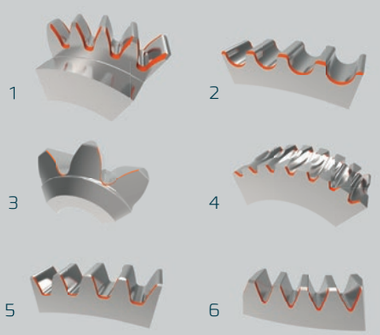

ChamferCut: One Tool, Many Applications

1. Involute gear with interfering contour
2. Timing belt pully 3. Bevel gear
4. Worm gear 5. Beveloid gear
6. Internal gear

The increasing power density of modern transmission systems means that all the components have to be produced to higher and higher precision. The LMT Fette ChamferCut system delivers reliable milling of different types of gears and components.

The idea for the ChamferCut arose over 15 years ago. In the meantime, it is used for chamfering and deburring over 1,250 different components in 24 countries. The ChamferCut System is highly flexible and can be used to manufacture the most varied types of gear profiles faster, more accurately, and more costeffectively than using other deburring processes.

Two tool solutions
On one hand, users can use a combined tool system in which hob and ChamferCut are fitted on one arbor. After gear cutting with the hob, deburring immediately begins with the two ChamferCut tools. On the other hand, a stand-alone ChamferCut system can carry out deburring parallel to hobbing. In this case, the two ChamferCut tools are mounted separately on a special chamfering unit, which is either linked with the hobbing machine or – a recent development – can be set up as a stand-alone machine.

In both cases, the exact chamfer form is produced by cutting. The material structure of the gear is not influenced by the process, and a constant chamfer depth is produced down to the gear root. Additional processing steps, such as a second hobbing cut, are unnecessary.

Many applications
The ChamferCut makes it possible to produce a very wide range of gear profiles. These can include involute gears or more complex special profiles. The chamfering of beveloid gears, internal gears and bevel, sprocket or worm gears is also possible.

ChamferCut applications

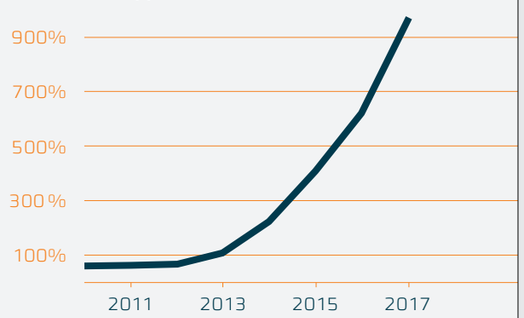

Quelle: LMT Tools

Local Presence

Milestone in China
It is a milestone for the LMT Group. It has now been active in China for over ten years and continuously expanded its presence there over that time. On May 8, 2018, Fette Compacting and LMT Tools began operations in a new factory and administration building in the city of Nanjing in East China. Some 500 invited guests attended the opening ceremony, including colleagues from the two companies' facilities around the world. The new company site in Nanjing was completed in just under one year and was built on an area of over 50,000 square meters.

From Nanjing, LMT Tools supports companies in China in the automobile and wind power industries as well as the medical and aerospace technology sectors. With the new facility, LMT Tools China has modernized and expanded its service infrastructure. This includes reconditioning services for solid carbide, PCD and HSS tools as well as recoating in all grades.

Branches in Austria and Spain
In 2018, as part of its strategic reorientation, LMT Tools has opened two branch offices in Europe. The tool specialist has established its own sales teams in Austria and Spain to be able to offer local customers, among others from the automobile and supply industry and the engineering sector, tailor-made solutions for their manufacturing processes.

Reinforcements in Mexico
In 2018, LMT Tools has strongly expanded its sales presence in Mexico and increased the size of its sales team. Since the beginning of this year, customers in Central America have benefited from an increased LMT Tools sales presence on the Mexican market. While previously LMT Tools products were largely available through agents, they can now be obtained can now be obtained directly across all tooling segments: Rolling Systems, Gear Cutting, Milling & Threading, Advanced Tooling and Reaming.

LMT Tools Niederlassungen und Servicestandorte
LMT Tools subsidiaries and service organisations

Brasilien / Brazil
LMT Tools Brasil
Av. Cambacica 1200
Módulo 11
13097-160 São Paulo
Telefon +55 19 982439910
Telefax +55 11 55460476
contato@lmt-tools.com

China
LMT China Co. Ltd.
No. 9 Lanzhi Road
Jiangning Development Zone
211100 Nanjing
Telefon +86 25 52128866
Telefax +86 25 52106376
lmt.cn@lmt-tools.com

Deutschland / Germany
LMT Tool Systems
GmbH & Co. KG
Heidenheimer Strasse 84
73447 Oberkochen
Telefon +49 7364 9579-0
Telefax +49 7364 9579-8000
info@lmt-tools.com

Frankreich / France
LMT Belin France S.A.S.
Lieu dit „Les Cizes“
01590 Lavancia
Telefon +33 474 758989
Telefax +33 474 758990
belin@lmt-belin.com

Großbritannien und Irland / United Kingdom and Ireland
LMT UK Ltd.
Unit 4202 Waterside Centre
Solihull Parkway
Birmingham Business Park
B377YN Birmingham
Telefon +44 121 7175830
Telefax +44 121 7175838
lmt.uk@lmt-tools.com

Indien / India
LMT (India) Private Limited
Plot No. A-40/1
Phase I, MIDC
Chakan Industrial Area Village:
Nighoje, Tal: Khed
410501 Pune
Telefon +91 2135614900
Telefax +91 42337704
sales@lmt-tools.co.in

Korea
LMT Korea Co. Ltd.
Room 1212
Anyang Trade Center
161 Simin-daero, Dongan-Gu
Anyang-Si
431-817 Gyeonggi-Do
South Korea
Telefon +82 31 3848600
Telefax +82 31 3842121
lmt.kr@lmt-tools.com

Mexiko / Mexico
LMT Tools Mexico, SA de CV
Adolfo Prieto No. 1638
Colonia Del Valle Sur
03100 Mexico, DF
Telefon +52 55 40000653
Telefax +52 44 22215555
info@lmt.com.mx

Österreich / Austria
LMT Tool Systems
GmbH & Co. KG
Mosetiggasse 1
1230 Wien
Telefon +43 680 3106101
afloh@lmt-tools.com

Rumänien / Romania
LMT Tool Systems RO SRL
Business Center Sibiu
Camera 301, Etaj 3
Str. Sibiului nr. 2
557260 Selimbar, Sibiu
Telefon +40 269 246092
Telefax +40 269 560614
lmt.ro@lmt-tools.com

Russland / Russia
LLC LMT Tools
Serebryanicheskaya nab., 27
109028 Moscow
Telefon/Telefax +7 495 2807352
info@lmt-russia.ru

Spanien / Spain
LMT Tool Systems GmbH
Sucursal en España
C/Agricultura local no.12
planta 1 no. 16–18
08320 El Masnou
Telefon +34 937127435
Telefon/Telefax +34 935407002
jrodriguez@lmt-tools.com

Tschechische Republik und Slowakei / Czech Republic and Slovakia
LMT Czech Republic s.r.o.
Dusikova 3
63800 Brno-Lesná
Telefon +420 548 218722
Telefax +420 548 218723
lmt.fette@iol.cz

USA
Kanada / Canada
LMT USA Inc.
1081 S. Northpoint Blvd.
Waukegan, IL 60085
Telefon +1 847 3621560
Telefax +1 847 4731934
lmt.us@lmt-tools.com

LMT Belin France S.A.S.
Lieu dit „Les Cizes“
01590 Lavancia
Frankreich
Telefon +33 474 758989
Telefax +33 474 758990
info@lmt-belin.com
www.lmt-belin.com

LMT Fette Werkzeugtechnik GmbH & Co. KG
Grabauer Strasse 24
21493 Schwarzenbek
Deutschland
Telefon +49 4151 12-0
Telefax +49 4151 3797
info@lmt-fette.com
www.lmt-fette.com

LMT Kieninger GmbH & Co. KG
Vogesenstrasse 23
77933 Lahr
Deutschland
Telefon +49 7821 943-0
Telefax +49 7821 943213
info@lmt-kieninger.com
www.lmt-kieninger.com

LMT Onsrud LP
1081 S. Northpoint Blvd.
Waukegan, IL 60085
USA
Telefon +1 847 3621560
Telefax +1 847 4731934
info@onsrud.com
www.onsrud.com

LMT Tools

BELIN
FETTE
KIENINGER
ONSRUD

Printed in Germany, No. 7300370 (0818 1 BE/W)